GENTILI®

UNITED STATES

DROP DOWN LADDER RACKS

PRODUCT CATALOGUE

The Gentili range of drop down ladder racks for commercial vehicles

Watch the ***G2000 Harrier***

Watch the ***G2000 Maxi***

*Gentili have been supporting van users for 50 years, providing our customers with **solutions** which are both innovative and of the highest quality.*

*Our new **roof mounted equipment range** is now even more complete than ever, and our offering includes improved performance and advanced technical design, which means Gentili can deliver products with unparalleled safety records and ease of use for operators.*

This is our company mission: to look above and design THE FUTURE.

Ernesto Gentili
Chairman

GENTILI®
UNITED STATES

Configurations 4

G2000 Harrier 6

The G2000 Harrier is our flagship product, having been awarded the coveted and prestigious Adi Design Index award by the Association for Industrial design, a leading Italian design and industry competition, recognised throughout the world for its robust and stringent judging.

G2000 Maxi 16

Technical specifications 22

G2000 HARRIER
Created in Italy by Gentili

CONFIGURATIONS

1 X G2000 HARRIER WITH 1 X EXTENSION LADDER*

UP TO 132 lbs.

Loading and unloading heavy long ladders from high roofs ergonomically.

Loading 1 x extension ladder*

Maximum loading capacity up to 132 lbs.

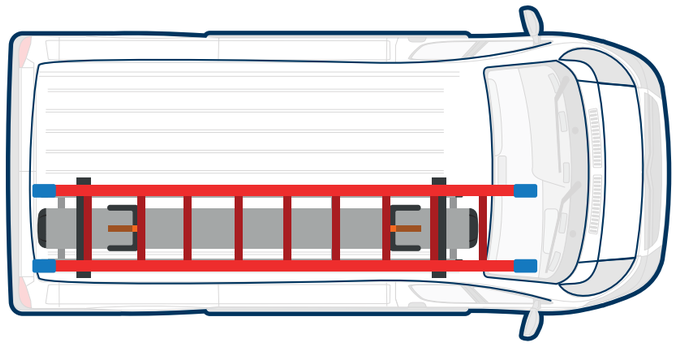

2 X G2000 HARRIER WITH 2 X EXTENSION LADDER**

UP TO 264 lbs.

Doubling the loading capacity up to 264 lbs. by installing 2 x G2000 Harrier ladder racks and carrying on productive and ergonomic operations.

Loading 2 x extension ladders*

Overall loading capacity up to 264 lbs., 132 lbs. for each ladder rack

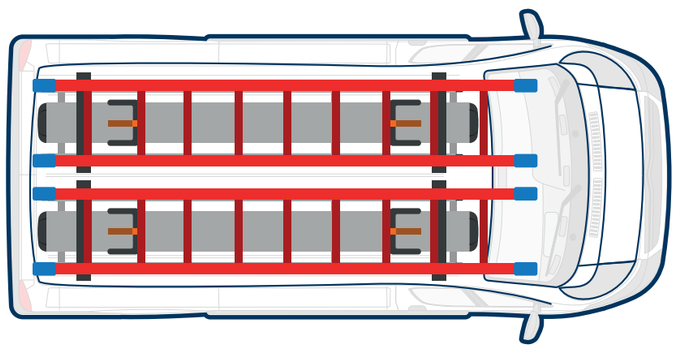

The G2000 Harrier's ladders holding system can be upgraded for holding 2 x extension ladders on each equipment by stacking them.
** 1 x G2000 Harrier upgraded ladder rack can load 2 x extension ladder and up to 132 lbs.*
*** 2 x G2000 Harrier upgraded ladder racks can load 4 x extension ladders and up to 264 lbs.*

G2000 MAXI
Created in Italy by Gentili

CONFIGURATIONS

UP TO 132 lbs.

1 X G2000 MAXI WITH 1 X EXTENSION LADDERS

Loading and unloading heavy long ladders from high roofs ergonomically.

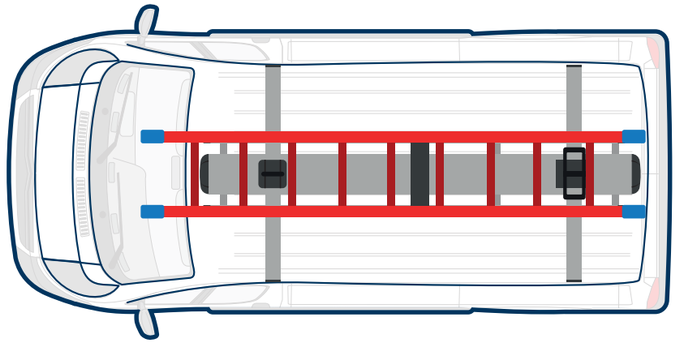

Loading 1 x extension ladder

Maximum loading capacity up to 132 lbs.

UP TO 132 lbs.

1 X G2000 MAXI WITH 2 X EXTENSION LADDERS

Loading and unloading heavy long ladders from high roofs ergonomically, up to 2 x extension ladders without stacking by installing 1 x G2000 Maxi ladder rack and carrying on productive and ergonomic operations.

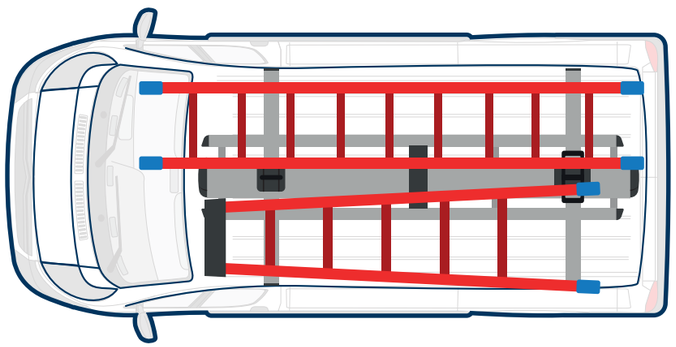

Loading 2 x extension ladders one beside the other

Maximum loading capacity up to 132 lbs.

G2000 HARRIER

Loading and unloading of ladders is easier and more risk-free than ever with the G2000 Harrier through the hydraulic assistance system minimizing health and safety issues

G2000 HARRIER

Created in Italy by Gentili

Gentili has been supplying customers world-wide with the G2000 – a product range which has gained a reputation for its robustness and quality since its launch over 25 years ago, when the first hydraulic ladder rack for LCVs was designed and launched by Gentili.

As an ISO 9001 company, Gentili have a firm commitment to continuous improvement. The G2000 series has been constantly updated and our new G2000 Harrier is the most recent dynamic enhancement to the product line.

As with all previous series of G2000 ladder racks, also the Harrier is designed and manufactured in Italy and and brings together the heritage of more than 50 years of knowledge and experience in vehicle ladder rack manufacturing.

The G2000 Harrier is designed to utilize the original roof mounting points. The design improvements bring together quality and style with a touch of Italian flair.

Why fit anything else?
Fit the best, fit the original.

Watch the
G2000 Harrier

DESIGNED WITH ERGONOMICS IN MIND

Configuration with 2 x G2000 Harrier loading up to 4 x ladders and 264 lbs.

The G2000 Harrier offers a fully assisted ladder mounting and deploying system, therefore becoming the ideal partner for customers looking to equip their vehicles with a safe and easy to use solution.

Due to its design, the G2000 Harrier offers an easy glide, single person operation. All actions are carried out by the operator with their feet on terra firma at all times, being equipped with a precision engineered hydraulic system.

Through 25 years of active use and continual improvement the G2000 Harrier is the most advanced and safest system of its type available.

MAXIMUM FLEXIBILITY

The G2000 Harrier can load extension ladders and step ladders up to 40 feet long.

The new version of the G2000 Harrier has added features to further improve the safe transport of ladders when the vehicle is moving.

The two retainer loops can be moved forwards and backwards independently, to suit different ladder lengths, to keep the ladder in the correct position in relation to the vehicle roof. They are covered with hard wearing rubber, to protect them from the abrasion caused by the ladder rungs.

The front and rear horizontal bars have adjustable, impact resistant ABS plastic side retainers, to contain the ladder laterally when the vehicle is moving.

UTILITY SERVICE TRUCK

Universal ladder rack for ANY ladder up to 132 lbs. ensuring ergonomic operations thanks to its hydraulic assistance.

1 X G2000 HARRIER + 1 LADDERS OR 2 LADDERS (by stacking)

UP TO 132 lbs.

Easy and safe access to your ladders without blocking side doors or tool boxes. Keep your boots on the ground! Acccess ladders safely without steping on bumper or steps to retreive.

2 X G2000 HARRIER + 2 LADDERS OR 4 LADDERS (by stacking)

UP TO 264 lbs.

BOX TRUCK / KUV / ENCLOSED BODY

Universal ladder rack for ANY vehicle up to 11 feet ensuring ergonomic operations thanks to its hydraulic assistance.

UP TO 132 lbs.

1 X G2000 HARRIER + 1 LADDERS OR 2 LADDERS (by stacking)

Optimize space utilization by taking advantage of even high and hard-to-reach rooftops.

UP TO 264 lbs.

2 X G2000 HARRIER + 2 LADDERS OR 4 LADDERS (by stacking)

Maximize rooftops utility with 2 x G2000 Harrier ladder racks that allow loading up to 2 x ladders by stacking and up to 132 lbs. on each ladder rack.

PICKUP TRUCK WITH RACK

Any truck with a rack installed on the rear bed can install a G2000 ladder rack.

1 X G2000 HARRIER + 1 LADDERS OR 2 LADDERS (by stacking)

UP TO 132 lbs.

The G2000 ladder racks allow ergonomic handling of heavy ladders by loading / unloading to the roof / ground without the need to climb on the truck.

2 X G2000 HARRIER + 2 LADDERS OR 4 LADDERS (by stacking)

UP TO 264 lbs.

The G2000 ladder racks provide ergonomic access to ladders that are unloaded close to the ground and do not require lifting them above the waist while handling.

PICKUP TRUCK WITH BODY

Any truck with a body installed in the rear can install a G2000 ladder rack.

UP TO 132 lbs.

1 X G2000 HARRIER + 1 LADDERS OR 2 LADDERS (by stacking)

With the G2000 series, health risks to the back and shoulders are dramatically reduced when loading / unloading long and heavy ladders because the operations are assisted by a hydraulic assistance system reducing the effort required to a minimum.

MAXI G2000

Created in Italy by Gentili

*The **G2000 Maxi** is the latest addition to our ladder rack range, designed and manufactured at our state of the art facility in Italy. This new product has been designed to securely store two ladders at the same time, whilst still offering the same operational smoothness and safety as our G2000 Harrier single ladder rack.*

*Watch the **G2000 Maxi***

MAXI G2000

Created in Italy by Gentili

The G2000 Maxi ladder racks maximize efficiency by being able to load / unload 2 x ladders side by side on a single ladder rack and getting them both to the roof / ground in seconds.

Two ladders can be mounted side by side. Two adjustable ladder retainers ensure that the ladders are held in place during transit. Securing straps hold the ladders firmly against the ladder rack at all times.

Sideways movement of the ladders being carried is stopped by the adjustable pair of load stops, fitted front and rear.

UTILITY SERVICE TRUCK

Universal ladder rack for ANY ladder up to 132 lbs. ensuring ergonomic operations thanks to its hydraulic assistance.

1 X G2000 MAXI + 2 LADDERS SIDE BY SIDE

UP TO 132 lbs.

Easy and safe access to your ladders without blocking side doors or tool boxes. Keep your boots on the ground! Acccess ladders safely without steping on bumper or steps to retreive.

BOX TRUCK / KUV / ENCLOSED BODY

Roof height is no longer an issue since the ladder is brought to the ground with the G2000 Maxi ladder rack and its hydraulic assistance system.

1 X G2000 MAXI + 2 LADDERS SIDE BY SIDE

UP TO 132 lbs.

PICKUP TRUCK WITH RACK

Any truck with a rack installed on the rear bed can install a G2000 ladder rack.

1 X G2000 MAXI + 2 LADDERS SIDE BY SIDE

UP TO 132 lbs.

PICKUP TRUCK WITH BODY

The G2000 Maxi ladder racks handle 2 x ladders with one ergonomic operation.

1 X G2000 MAXI + 2 LADDERS SIDE BY SIDE

UP TO 132 lbs.

G2000 HARRIER Created in Italy by Gentili

G2000 MAXI Created in Italy by Gentili

ERGONOMICS
ACCESS TO LADDERS

NO lifting,
Dramatically reduced accidents,
Dramatically reduced injuries

UNIVERSAL INSTALLATION

Fitment for vans up to 11 feet tall – vans, truck, KUVs, trailers

HEAVY AND LONG LADDERS

Workers can easily load and unload heavy ladders because of the hydraulic lift system

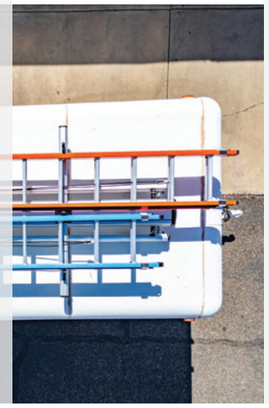

DURABLE MATERIALS

main parts made from anodised aluminium, offering maximum protection from corrosion and allowing for minimal maintenance. Stainless steel parts offer strength and extended longevity.

HIGH ROOF CONCEPT

Never lift your heavy ladder above the waist line because of the unique vertical loading style of the Gentili Drop Down Ladder Rack

ANY LADDERS

Fits any extension ladder and step ladder up to 40' long. Weight capacity is 132 lbs.

SECURE

new profile parts are designed to be safe, strong and low profile; reducing both wind noise and reducing impact on fuel consumption.

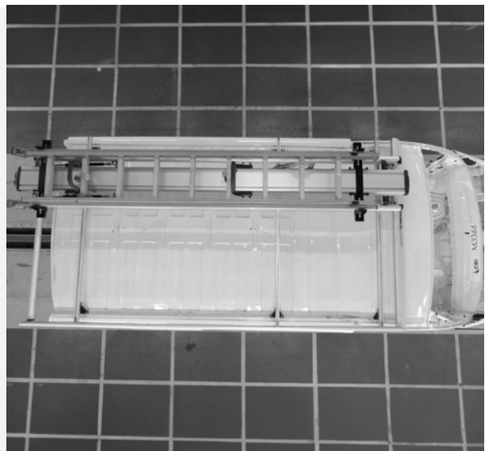

TÜV GS CRASH TEST

Gentili takes safety seriously – and don't just take our word for it; the G2000 range is TÜV tested and certified and has been crash tested to a 20g force on a vehicle shell.
When we say it is safe, we mean it.

ECE R17 Crash Tested

TECHNICAL SPECIFICATIONS

	LBS. G2000 Harrier	LBS. G2000 MAXI
Type 1 ladder rack	79	92
Type 3 ladder rack	99	110
Type 4 ladder rack	106	117

Safe maximum carrying weight 132 LB
TÜV GS certified
20g Crash tested according to ECE R17

• G2000 Harrier Ladder rack Dimensions: IN

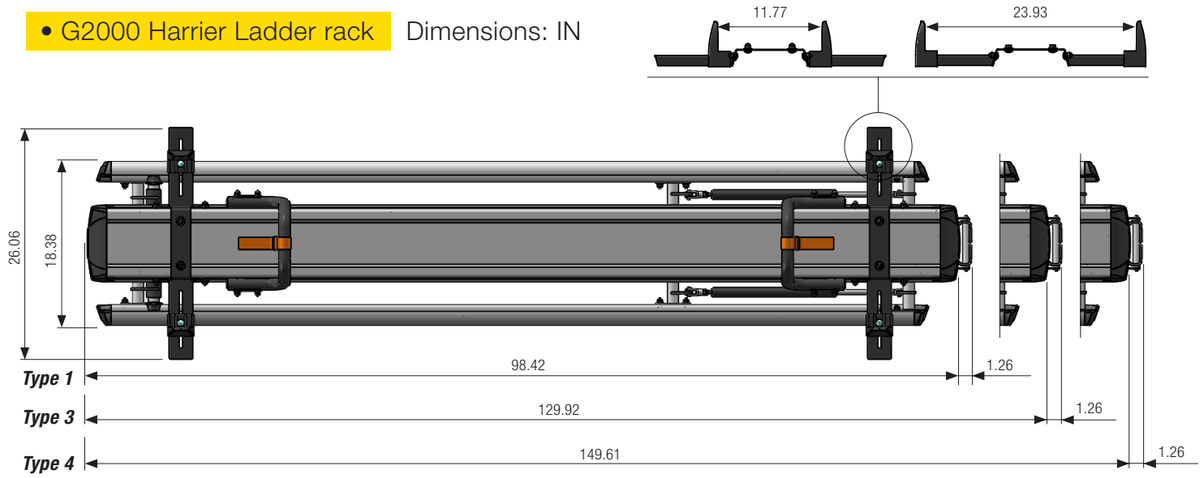

• G2000 MAXI Ladder rack Dimensions: IN

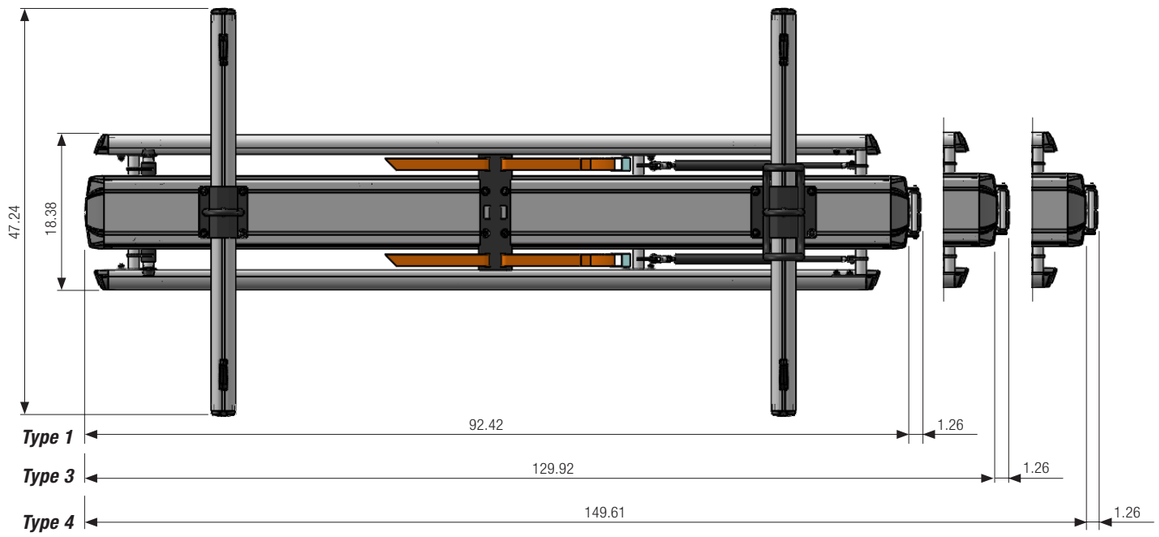

ACCESSORIES

LADDER LOCK & HOLD DOWN - BLCG2HR

Available as an accessory for the G2000 Harrier

PATENTED

PATENT No 0000281312

The stainless-steel Ladder Lock & Hold Down holds ladders without using straps, making the process of loading and unloading the ladders a matter of 20 seconds. The height is adjustable from 1 to 9.1 inches to accommodate multiple ladders by stacking. The Ladder Lock & Hold Down is padlock-compatible to help prevent theft.

✶ Padlock not supplied

KEY BENEFITS

- Improves efficiency (no straps)
- Anti-theft system
- Loading capacity for 2 x stacked ladders (up to 9.1 ins)

SPOILER KIT

Available as an accessory for the G2000 Harrier

Constructed from durable anodized aluminum, the Spoiler Kit transforms the approximately 40 inches of open roof width beside the G2000 Harrier into valuable additional cargo space. Designed for transporting long and bulky materials, the kit features a rear roller for smoother loading and unloading, a sturdy side bar that provides a secure tie-down point, and a front aerodynamic spoiler that helps reduce wind noise while driving.

KEY BENEFITS

- *Improved load capacity*
- *Easy loading operations*
- *Without increasing noise during operation*

CONDUIT CARRIER

Available as an accessory for the G2000 Harrier and the G2000 Maxi

Made of anodized aluminum, the Conduit Carrier is the ideal equipment for loading longer items on the roof. It is 11 feet long with a circumference of 6.3 inches. Never lose track of short pipe sections during transport. Our rear retrieval basket system is designed to help retain and retrieve short pipe sections, that migrate toward the front of the carrier while the vehicle is in motion, allowing operators to access materials from the rear opening.

KEY BENEFITS

- *Interior lined with extruded PVC profile*
- *Double ABS cap with key-operated safety lock*
- *Easy installation, no drilling required*
- *Rear retrieval basket system*

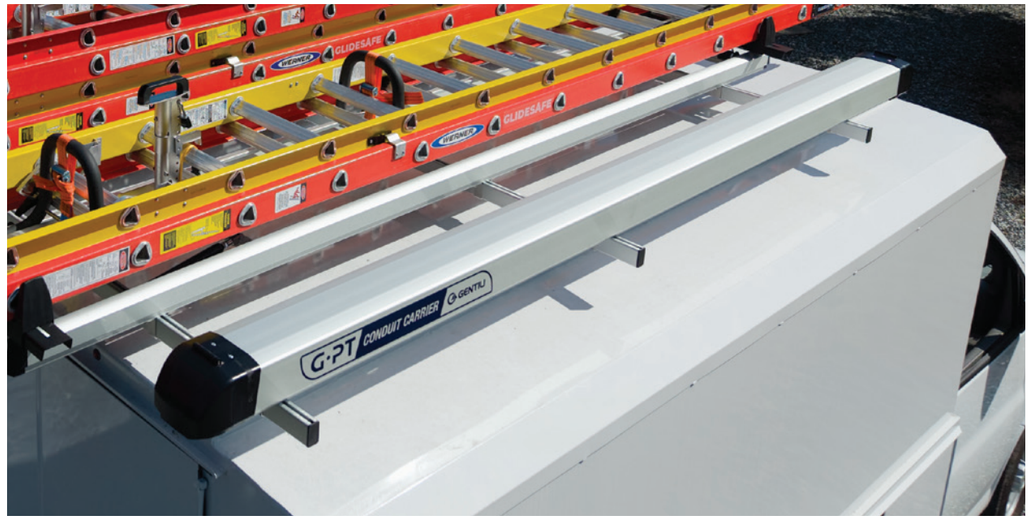

UPGRADE LADDERS SECURE KIT RSG2HR (2) + BLCG2HR-02 (1)

(2 x ladders)

Available as an accessory for the G2000 Harrier

Constructed from durable stainless steel, the Upgrade Ladder Secure Kit includes two RSG2HR adjustable restraints, accommodating ladder widths from 11 to 17.3 inches. One restraint prevents forward movement during acceleration, while the other prevents rearward movement during deceleration. The kit also includes a BLCG2HR-02 Ladder Lock & Hold Down, which securely holds ladders in place vertically without straps—enabling fast, efficient loading and unloading in approximately 20 seconds. The height is adjustable between 7.4” to 14.5” to accommodate multiple ladders by stacking. The Ladder Lock & Hold Down is padlock capable to help prevent theft.

KEY BENEFITS

- *Improves efficiency (no straps)*
- *Anti-theft system*
- *Loading capacity for 2 x stacked ladders (up to 14.54 ins)*
- *Allows installing 3 x ladder racks on each vehicle roof*

2 x RSG2HR

✶ Padlock not supplied

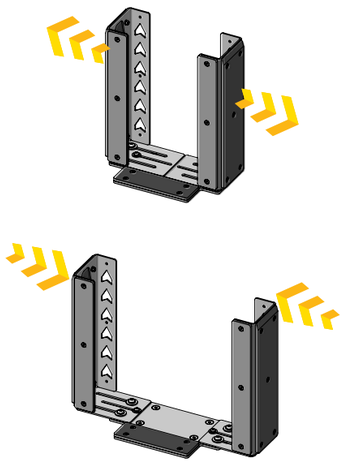

1 x BLCG2HR-02

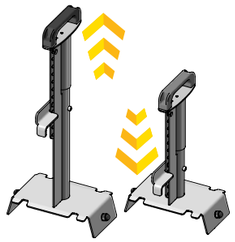

PATENT No 0000281312

PATENTED

G2000 HARRIER

Created in Italy by Gentili

Watch the G2000 Harrier

G2000 MAXI

Created in Italy by Gentili

Watch the G2000 Maxi

Gentili United States, Inc.
100 S.E. 2nd Street
Miami, FL 33131 - USA
Tel. (305) 600-2025
gentili@gentili.us.com

www.gentili.us.com

design by: MZDS_www.manziezanotti.it

Issued on 07/01/2019